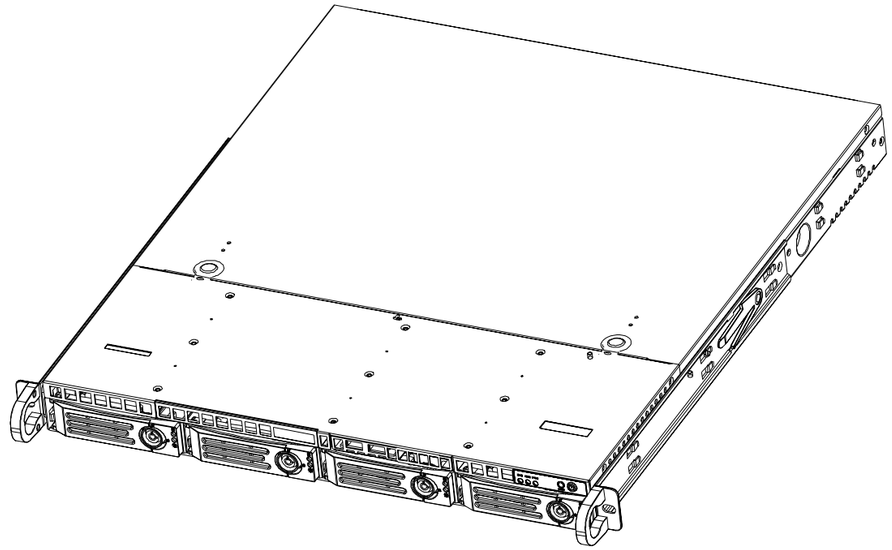

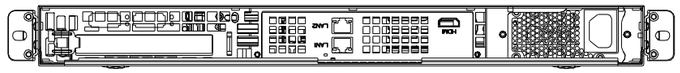

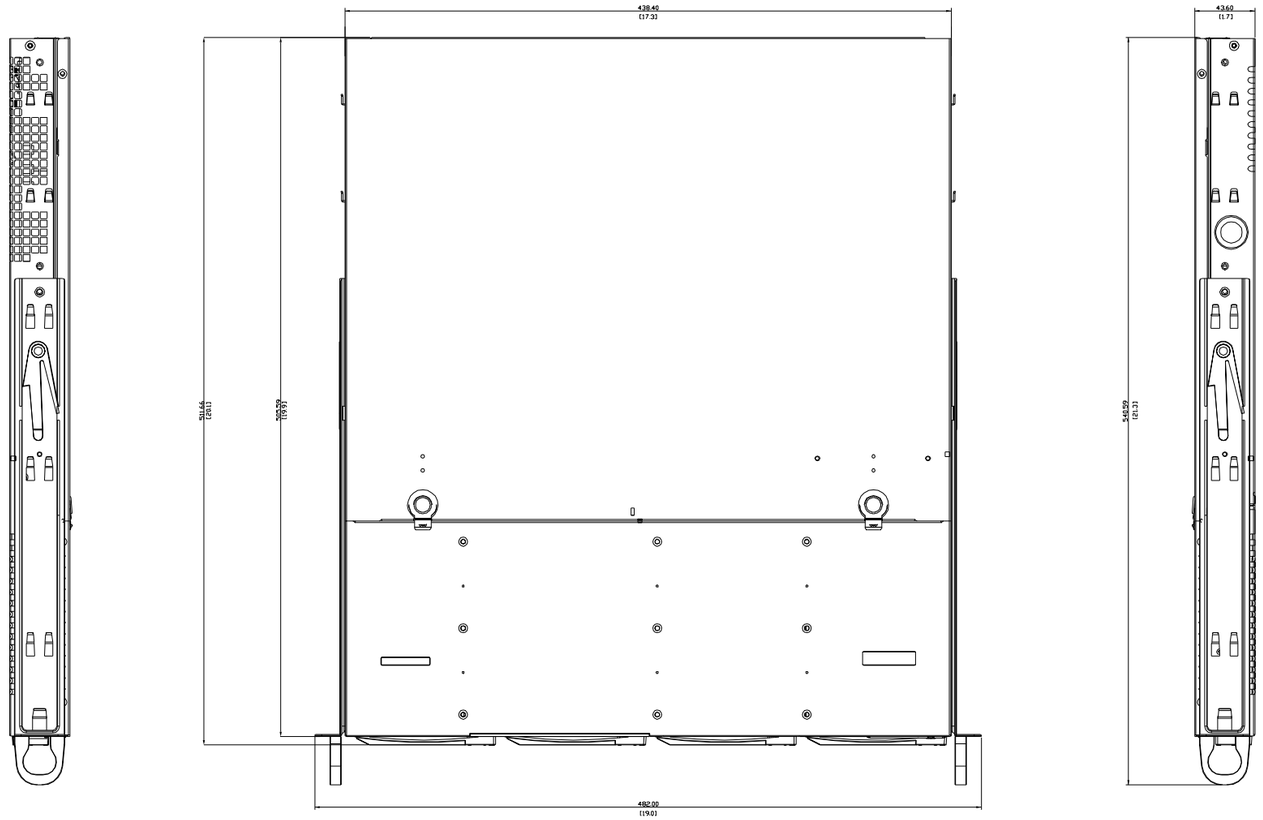
438.40
[17.3]
482.00
[19.0]

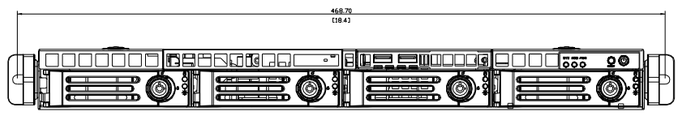
468.70
[18.4]