UniFi® Access Access Hub

ui.com/install

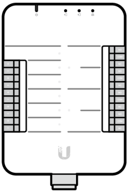

a

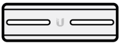

b

c

d

1

ui.com/install

A

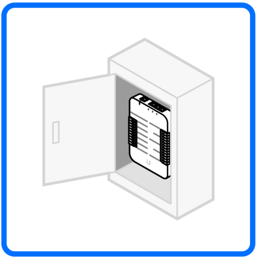

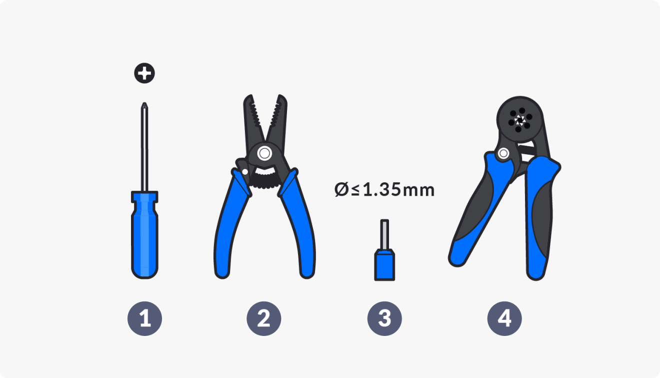
Ø≤1.35mm
1
2
3
4

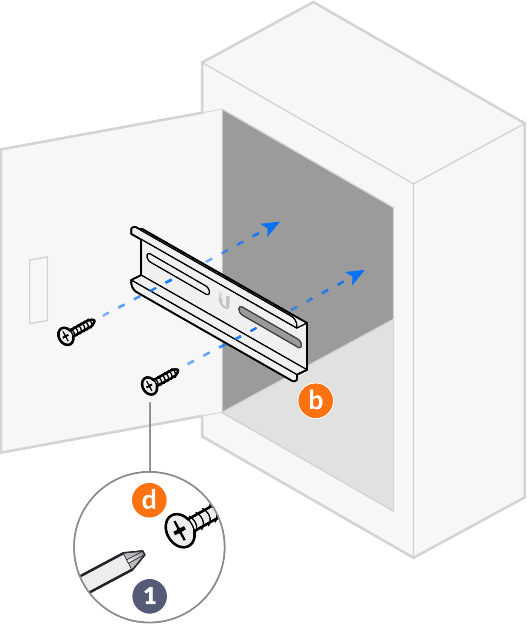

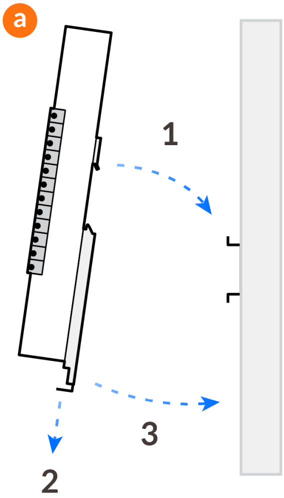

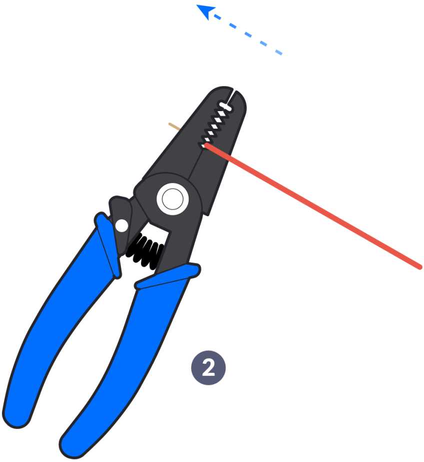

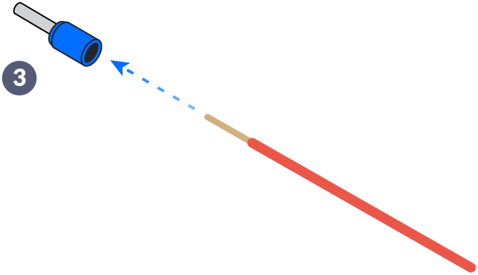

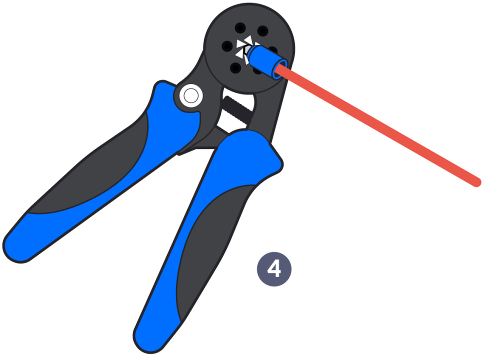

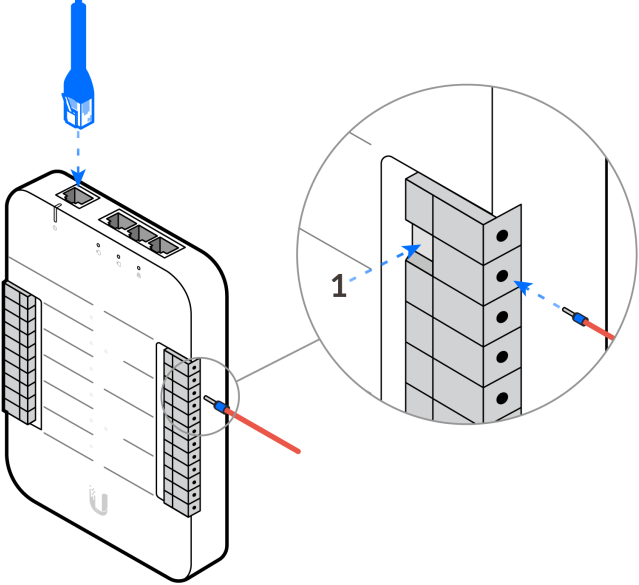

B

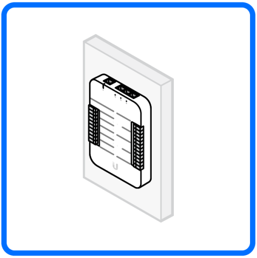

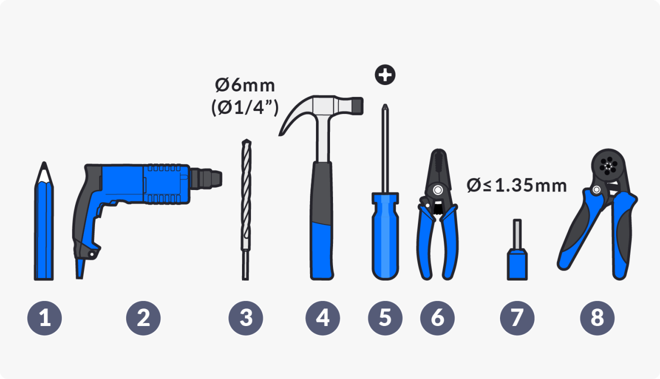
Ø6mm
(Ø1/4")
Ø≤1.35mm
1
2
3
4
5
6
7
8

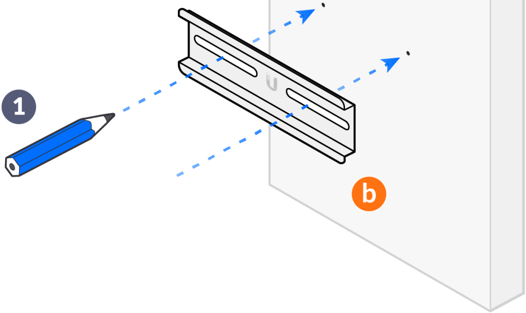

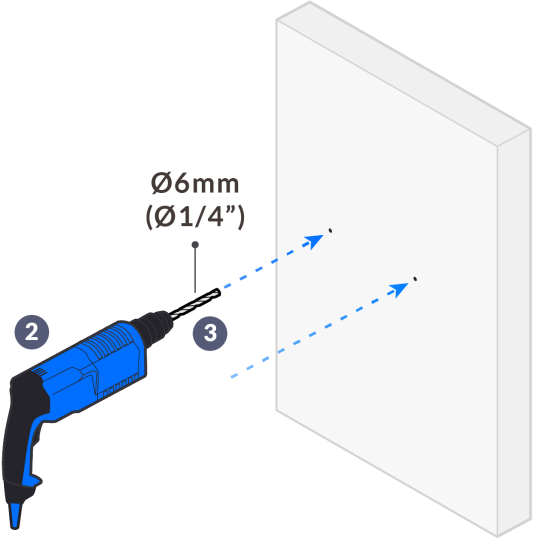

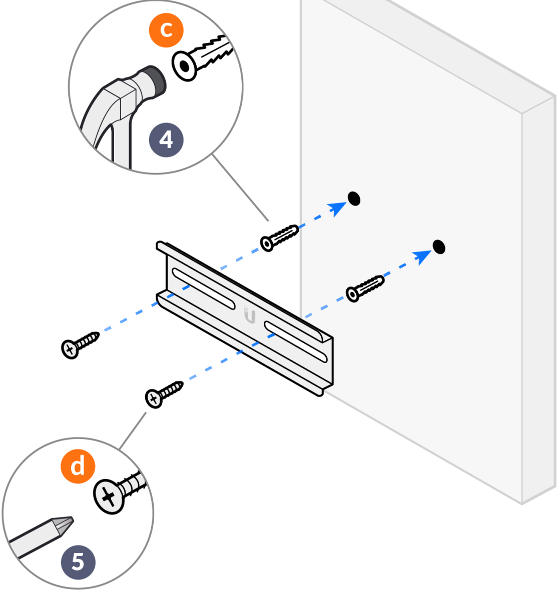

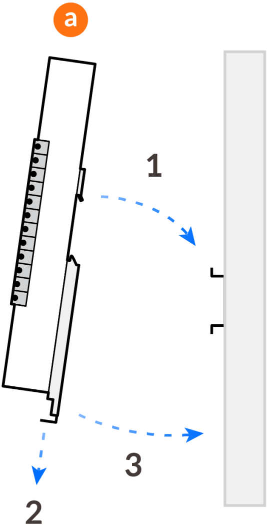

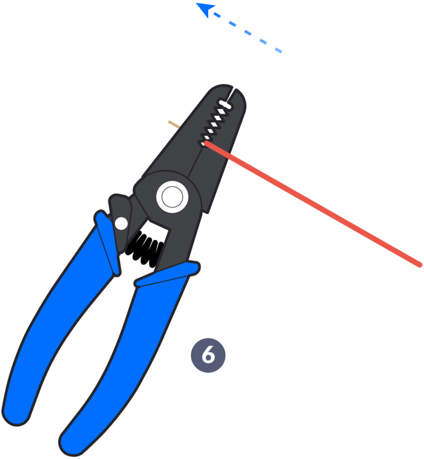

6

7

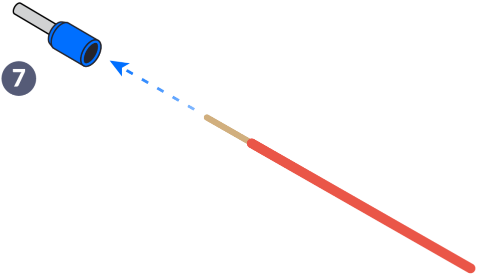

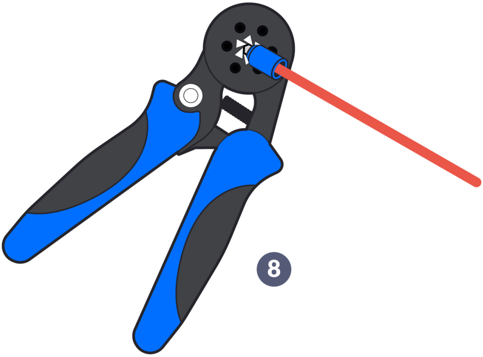

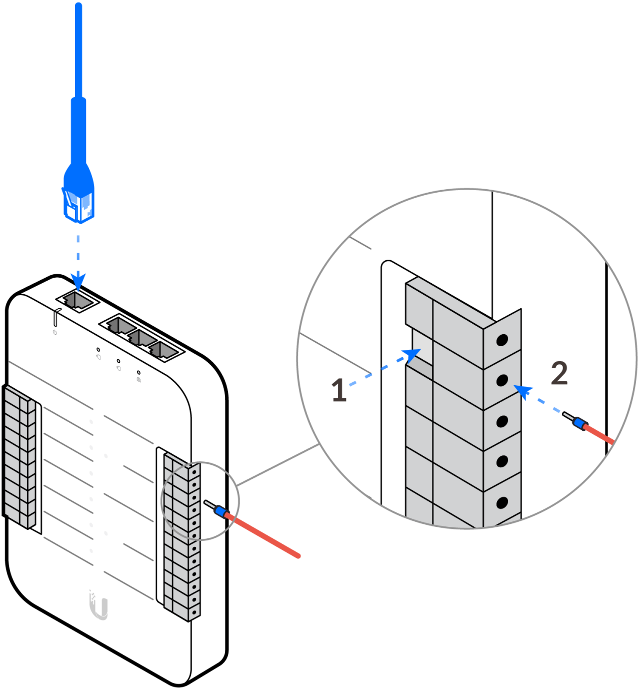

2

ui.com/install

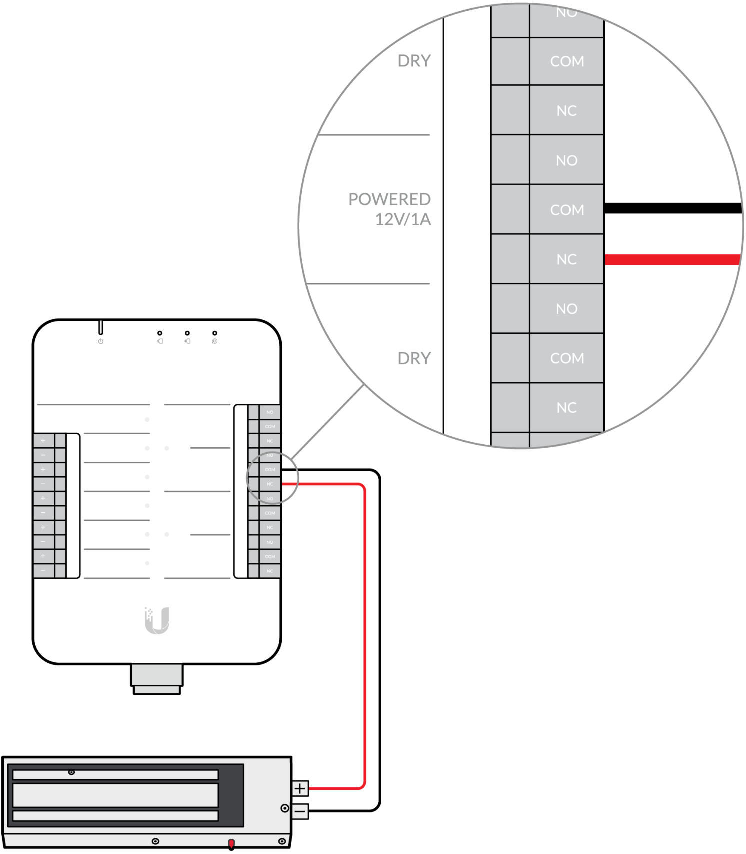
NO
DRY
COM
NC
NO
POWERED
12V/1A
COM
NC
NO
DRY
COM
NC
+
−

Fail-Safe Lock

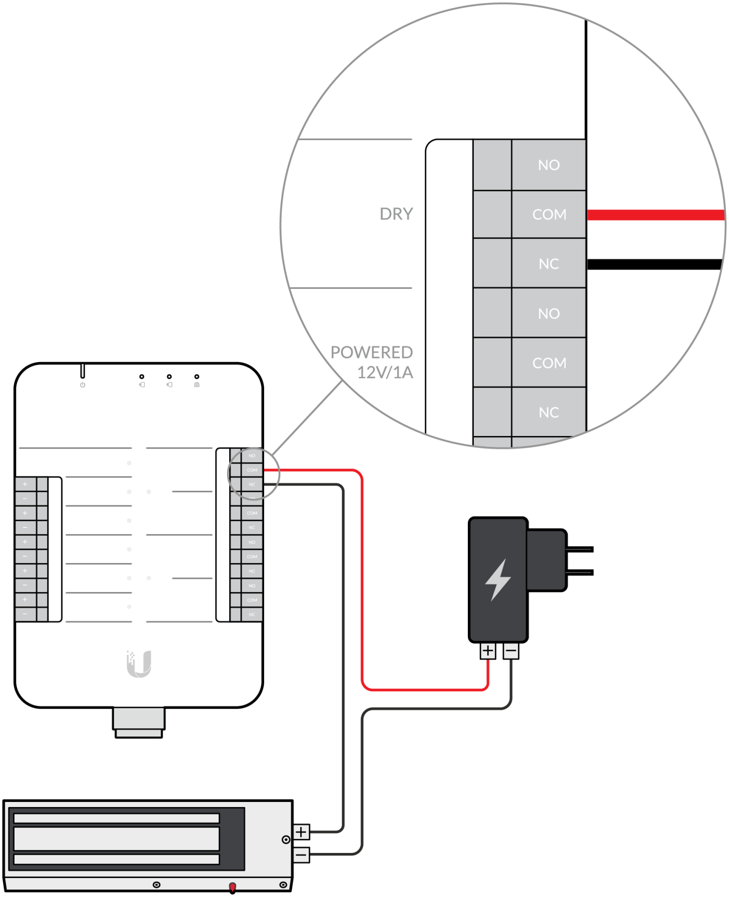
DRY
POWERED
12V/1A
NO
COM
NC
NO
COM
NC
+
–
+
–

Fail-Safe Lock

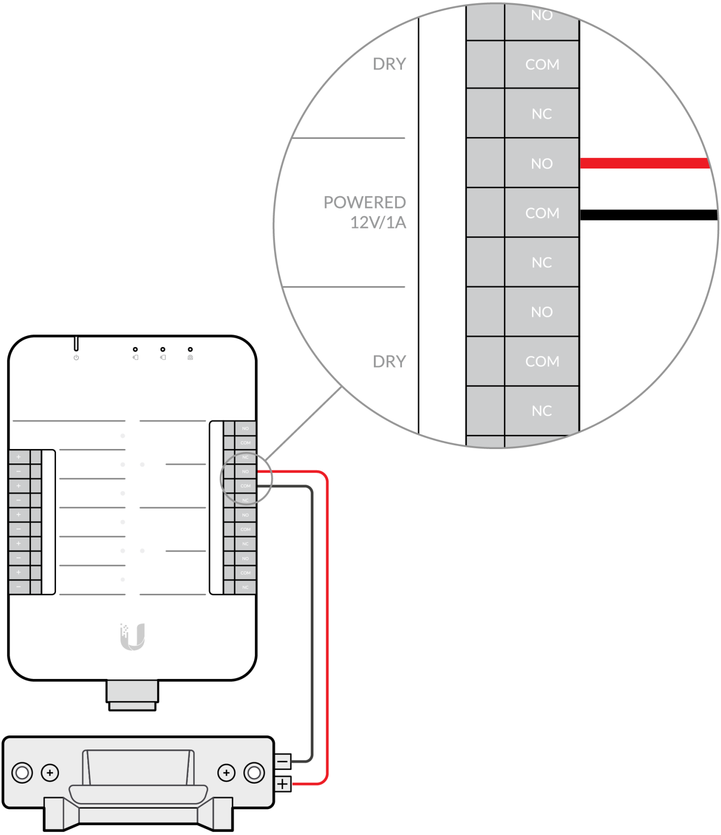
NO
DRY
COM
NC
NO
POWERED
12V/1A
COM
NC
NO
DRY
COM
NC

Fail-Secure Lock

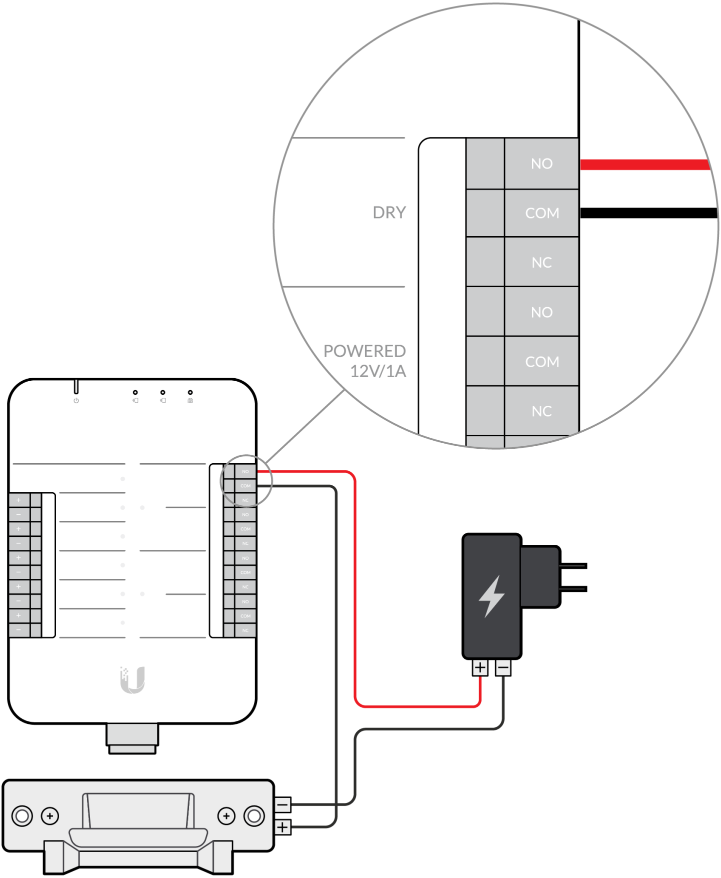
DRY
NO
COM
NC
POWERED
12V/1A
NO
COM
NC
+
−
+
−

Fail-Secure Lock

Push Button

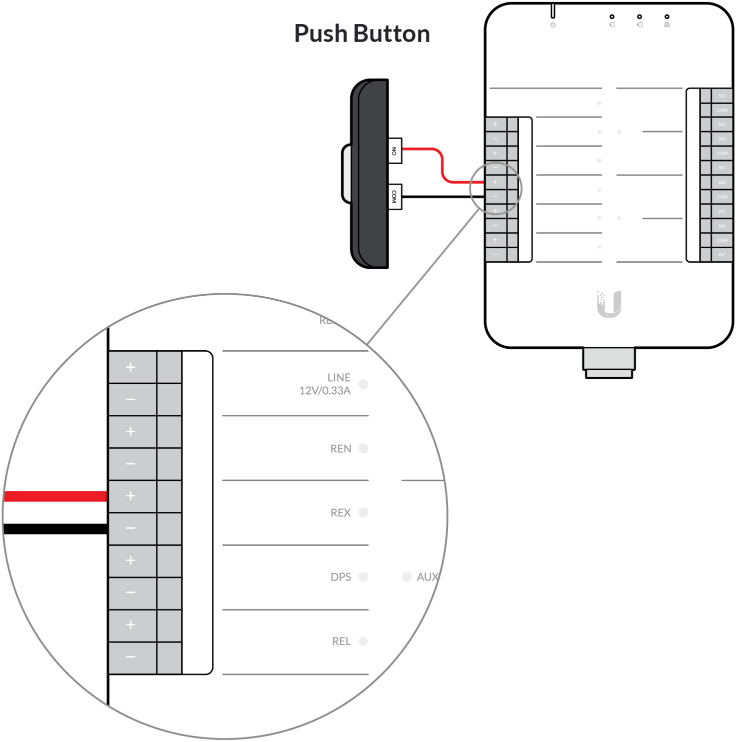
NO
COM
NO
COM
NC
NO
COM
NC
NO
COM
NC
NO
COM
NC
+
−
RE
LINE
12V/0.33A
REN
REX
DPS
AUX
REL

Door Position Switch (Door Sensor)

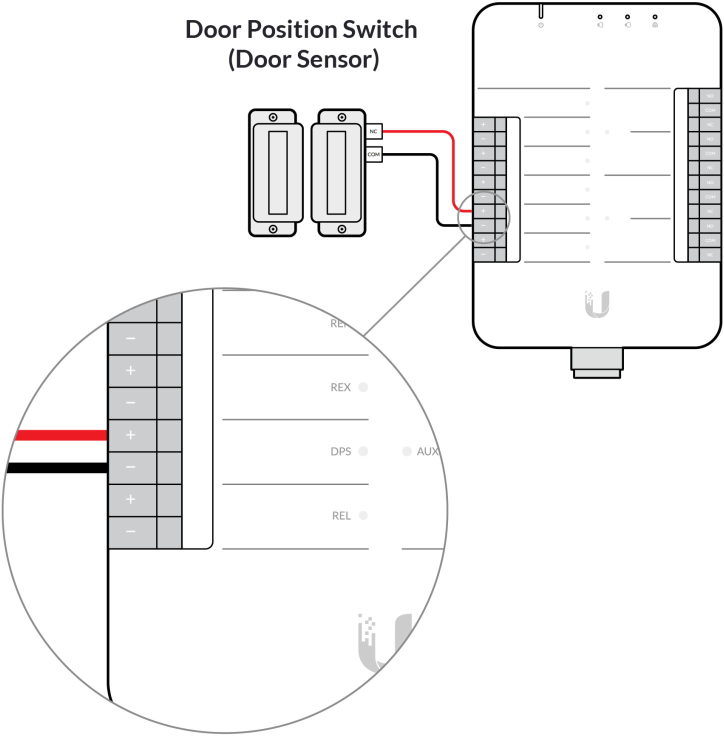
NC
COM
+
−
+
−
+
−
+
−
+
−
NO
COM
NC
NO
COM
NC
NO
COM
NC
NO
COM
NC
RE
REX
DPS
AUX
REL

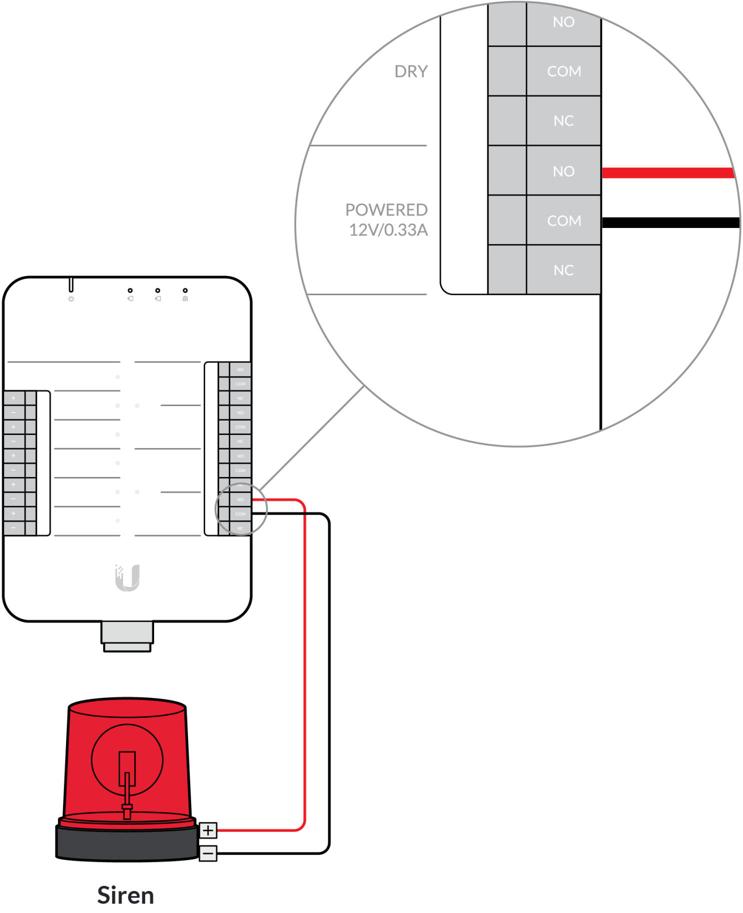
DRY
NO
COM
NC
POWERED
12V/0.33A
NO
COM
NC
+
−
Siren

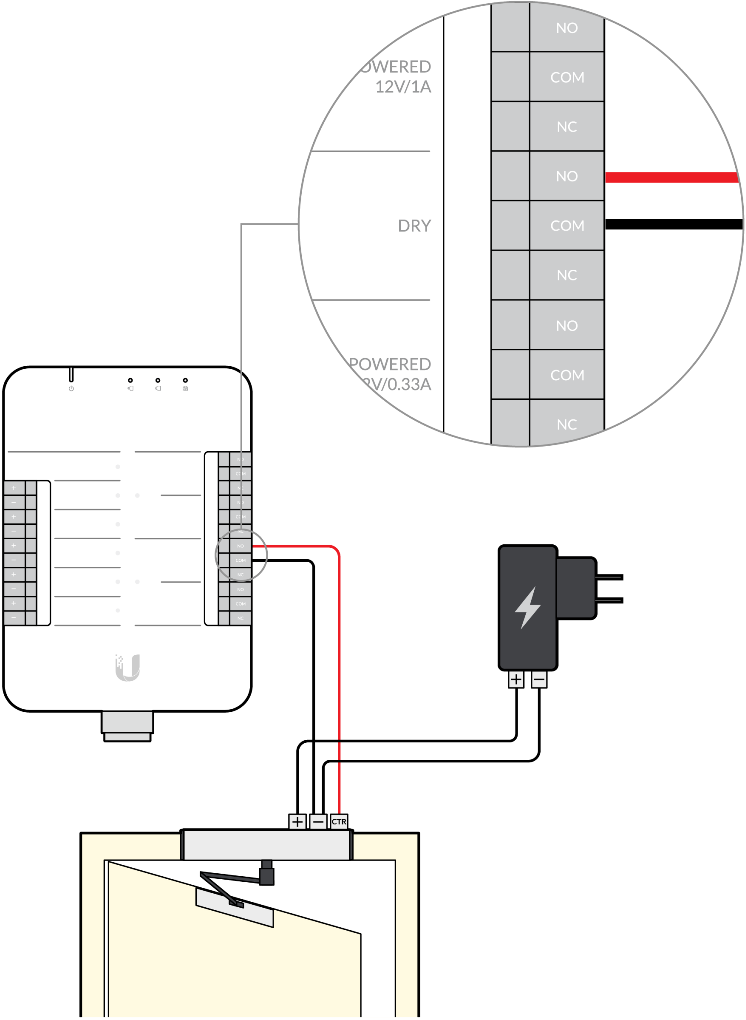
OWERED
12V/1A
DRY
POWERED
V/0.33A
NO
COM
NC
NO
COM
NC
NO
COM
NC
+
−
+
−
CTR

Door Operator

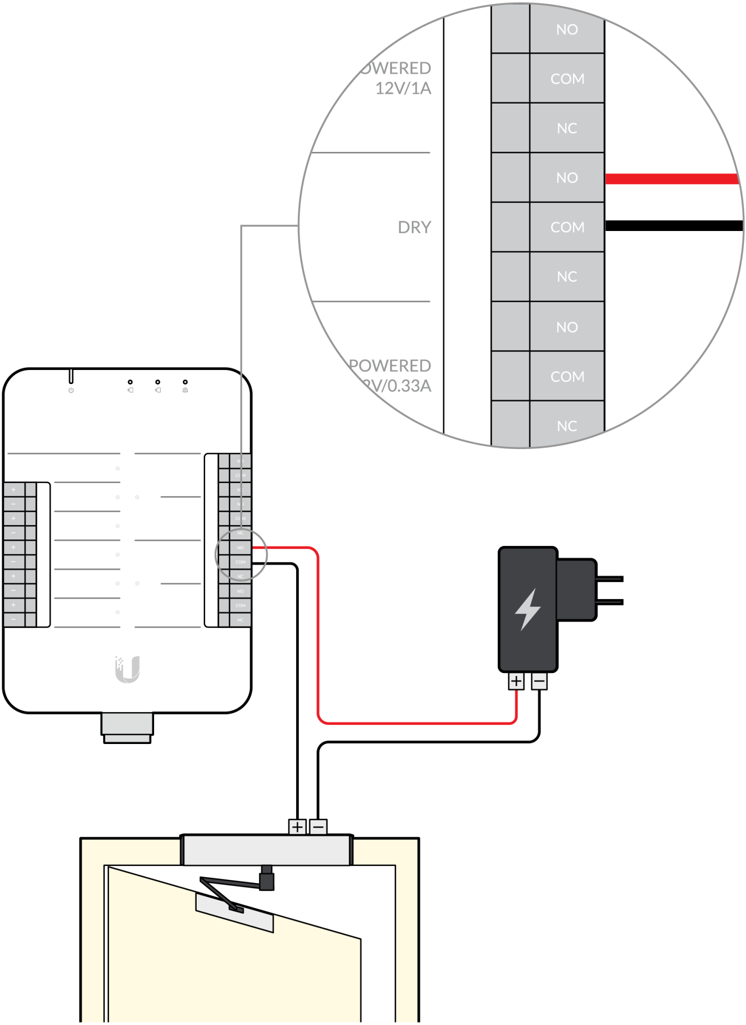
NO
COM
NC
NO
COM
NC
NO
COM
NC
OWERED
12V/1A
DRY
POWERED
V/0.33A
+
−
+
−

Door Operator

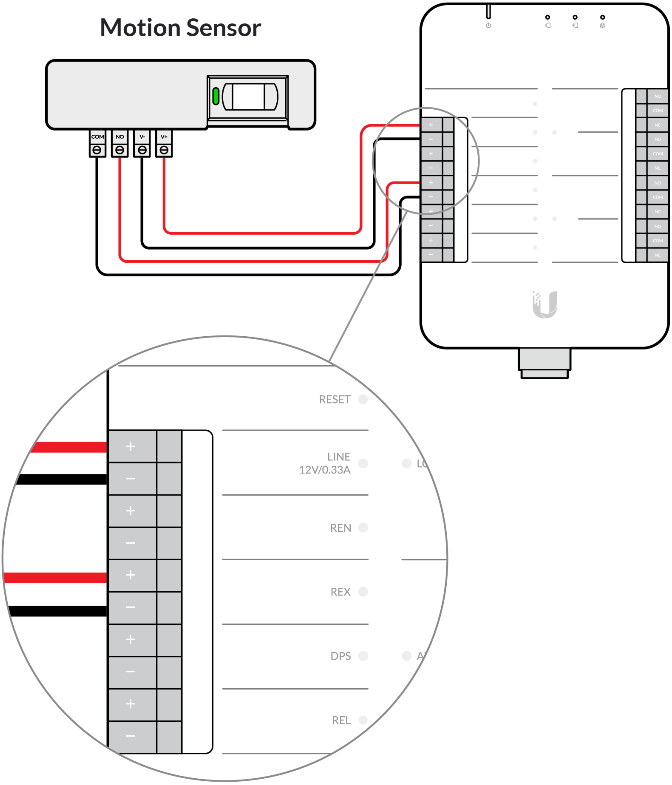
Motion Sensor
COM
NO
V-
V+
NO
COM
NC
RESET
LINE
12V/0.33A
REN
REX
DPS
REL

3

ui.com/install

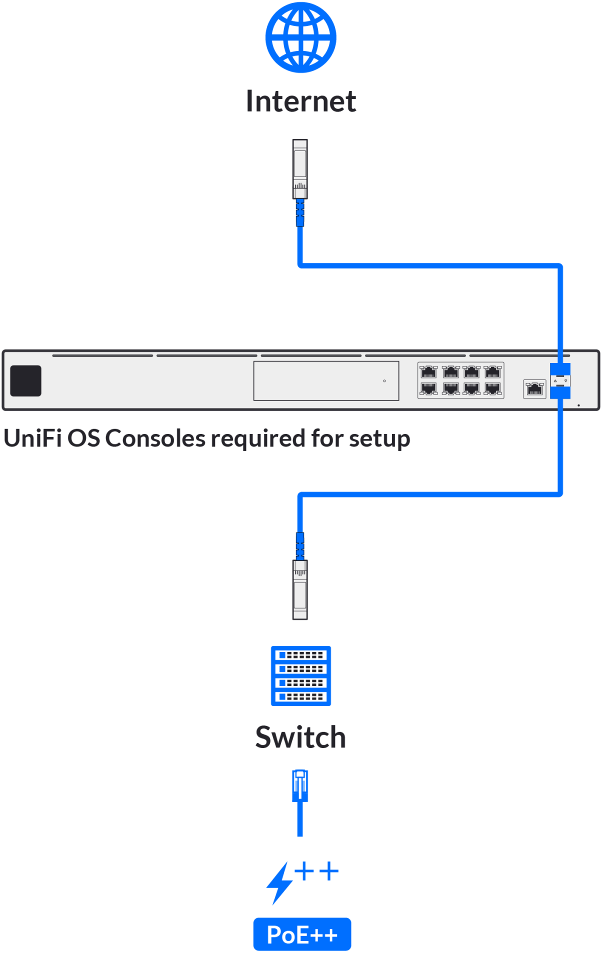
Internet
UniFi OS Consoles required for setup
Switch
PoE++

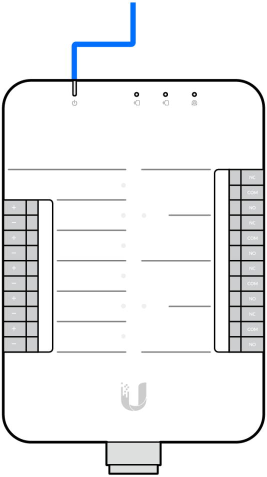

4

ui.com/install

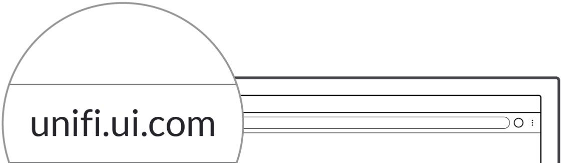
unifi.ui.com

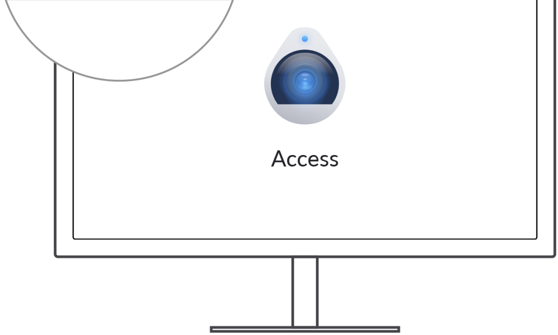

Installation Video

🔗

Get Answers
help.ui.com

UI Support

🔗

©2019-2020 Ubiquiti Inc. All rights reserved. Ubiquiti, Ubiquiti Networks, the Ubiquiti U logo, UniFi Access, and UniFi are trademarks or registered trademarks of Ubiquiti Inc. in the United States and in other countries. All other trademarks are the property of their respective owners.