VIVOTEK
www.vivotek.com

IP Surveillance

AP-GIC-015B-095
Surveillance PoE Junction Box

Installation Guide

Rev.: 1.0

CAUTION:
REFER SERVICING TO QUALIFIED SERVICE PERSONNEL.

UNPACKING:
Unpack carefully. Electronic components can be damaged if improperly handled or dropped. If an item appears damaged in shipment, place it properly in its carton and notify the shipper.

⚠ IMPORTANT!:

1. The electrical connections and conduit installations shall be made by a certified electrician following local regulations.
2. Risks of electric shock exist. The mains supply shall be disconnected before installation.
3. Read and follow Instructions: All operating and user instructions should be read and followed before the unit is to be operated.
4. This product relies on the building's installation for short-circuit (overcurrent) protection. Ensure that the protective device is listed rated not greater than 20A.
5. Attach the ground wire (to external ground) to a suitable grounding point, e.g., an earth stake.
6. Observe national and local regulations for the installation.
7. To avoid additional accummulation of moisture, please avoid installing the components in cabinet during a raining weather.
8. Only use applicable tools when installing this product; excessive force can damage the product.
9. Use only accessories compliant with the technical specifications of the product.
10. When the need arises for transportting this product, it is recommended to use the original shipping package.

Revision History:

Rev. 1.0: Initial release.

Mechanical Dimensions:

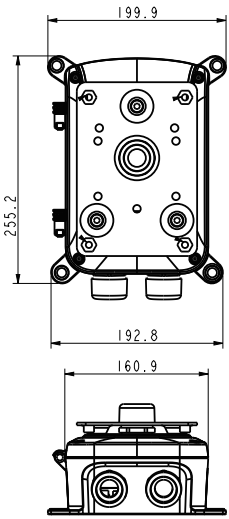

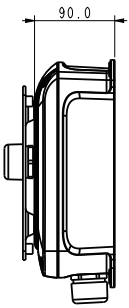

I Applicable Mount & Brackets

Item	Models	Applicable Cameras
Junction box	AP-GIC-015B-095	SD9365, SD9366, SD9363, SD9364
External housings	AE-239, AE-244, AE-23E, AE-23F	Box cameras

II Wiring

Route your power wires through a 3/4" conduit into the power box. The wiring scheme is shown below. The power supply converts 100~240V power to the 95W PoE output to IP cameras.

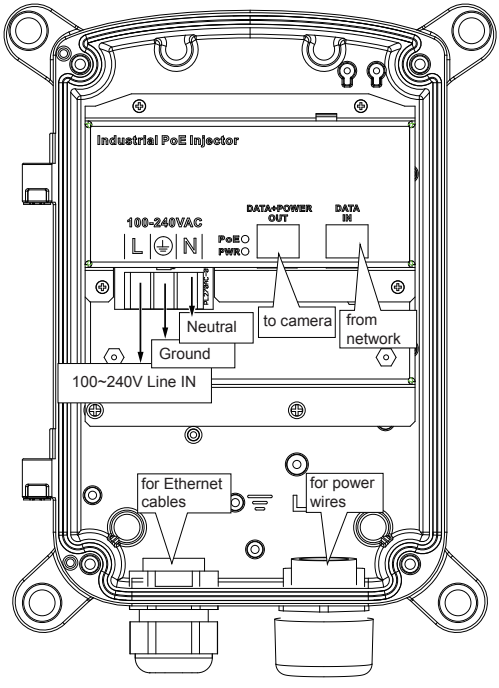

III Introduction

The power box can be mounted with the AM-314, AM315 pole-mount, AM-414 corner-mount bracket, or directly secured to a wall.

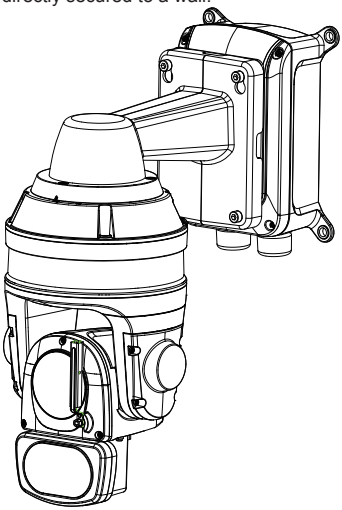

The power box can be mounted with the external housings, such as the AE-239, AE-244, AE-23E, and AE-23F.

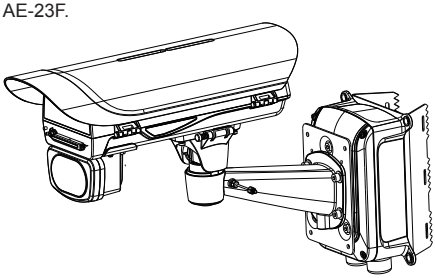

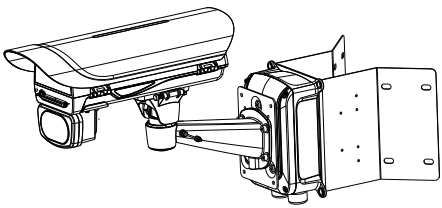

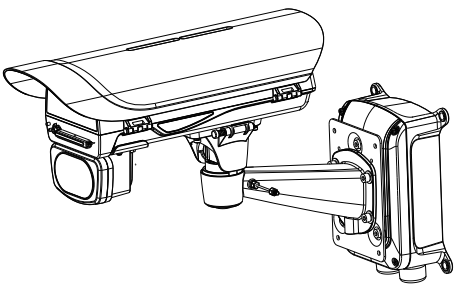

IV Installation

Use the included M10 hex socket screws to secure the power box to a pole-mount or corner mount bracket.

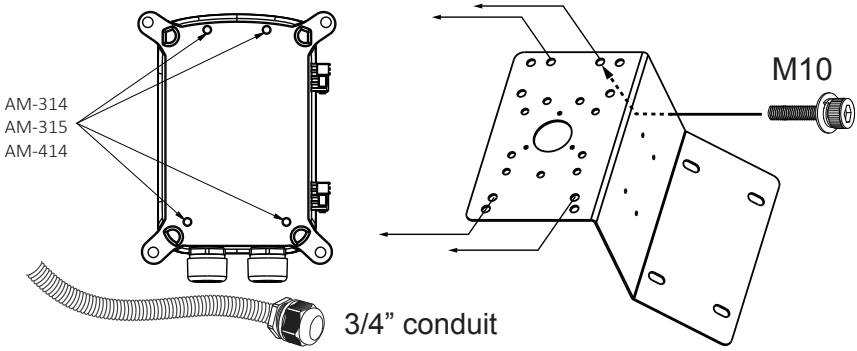

The mounting hole definition is illustrated below. The same mounting hole pattern apply to all pole-mount and corner-mount brackets.

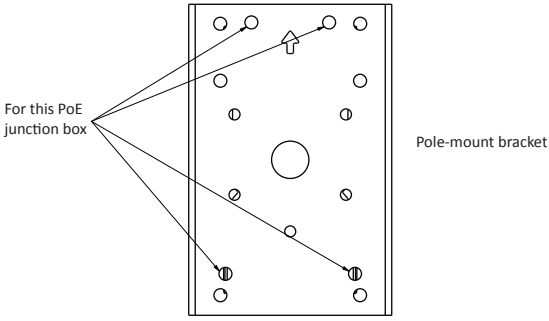

Pole-mount bracket

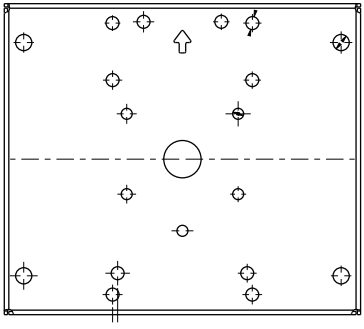

Corner-mount bracket

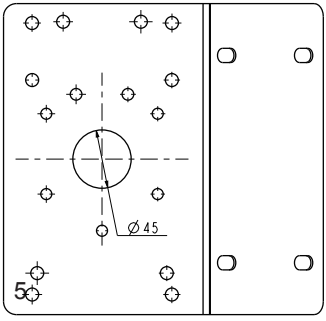

If the power box is directly mounted to wall, drill holes in a diameter of 9.5mm or 3/8", and 4cm deep.

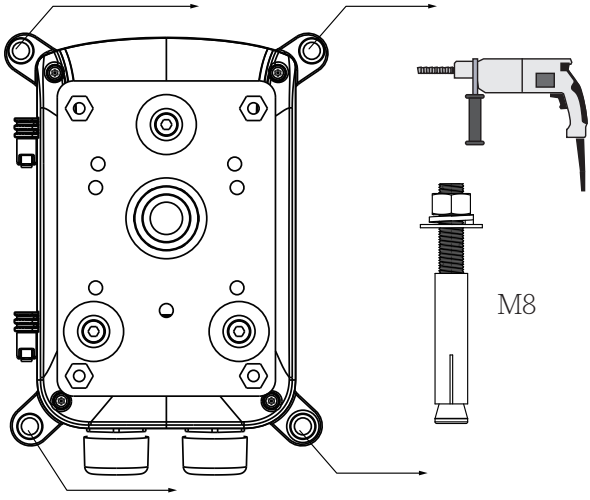

Use the following mounting positions for the camera housings (via AM-21D and AM-21E brackets).

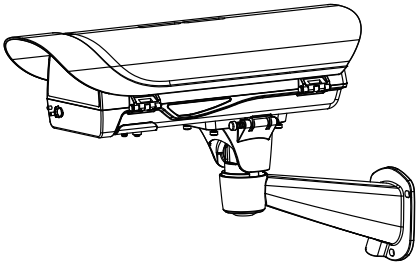

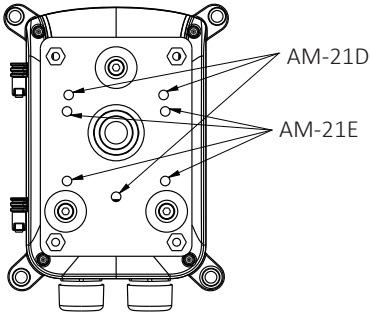

This page is intentionally left blank.

This page is intentionally left blank.