ConteraCMR™

A1 SECURITY CAMERAS
The First Name in Security

Arecont Vision
A COSTAR COMPANY

Contera™ High Performance NVR Server

80TB Max Storage Cloud Managed Recorder with 64 Max Channel Count

Contera™ high performance cloud managed NVR servers are designed to offer maximum performance and reliability, paired with the powerful features and functionality of the ConteraWS™ Web Services platform. These 2U servers offer higher channel counts (up to 64) and feature enterprise options like front removable drives, redundant power supplies, dual SSD OS drives, and RAID5.

High performance NVR servers come preloaded with ConteraVMS™ Server software and run the Windows 10 operating system. These high power servers are enterprise level HD IP recorders with the increased processing and throughput capabilities needed to handle larger channel count, storage, and remote usage requirements.

Enhance the functionality of your server even further by pairing it with ConteraWS Web Services which allows you to centralize user management, monitor the health of your recording system, and take advantage of time saving feature like online export and video or clip file sharing. There is no need to write, remember, or type IP addresses and other network information for remote connections. Simply enable ConteraWS on your recorder, and then connect using the ConteraWS Web Client to manage recorder configurations and user access.

Cloud Management | **Cloud Video Export and Sharing** | **ConteraVMS License Ready** | **Windows Standard OS** | **On-Board Storage Up to 80TB** | **Front Swappable Drives** | **Dual Gigabit NICs** | **Dual SSD OS Drives** | **4 Drive Capacity** | **RAID Storage and Redundant OS Drive Options**

Centralized User Management

ConteraWS provides secure storage of all user profile information, allowing role-based management for hundreds of users and device permissions.

Health Monitoring

Cloud-based health monitoring ensures your cameras and recorders are working properly and minimum recording retention levels are being met.

Alerts and Reports

ConteraWS grants insight into operational events at recorder locations and provides valuable business intelligence based on customer or employee activity.

Single Sign-on

Log into ConteraWS Web Services, ConteraVMS, and Arecont Vision Mobile using the same email address and password.

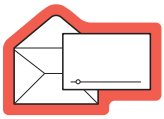

Clip Sharing

Export video clips to the cloud so they cannot be overwritten or lost. Share video clips via email with password protection.

Series Features

- Cloud Management with ConteraWS™
- ConteraVMS™ Ready
- Cloud Video Export and Sharing
- 12, 16, 20, 24, 28, 30, 36, 48, 64, or 80TB Storage Capacity
- 8 Removable Hard Disk Drives (HDDs)
- Windows OS
- 64 Max Channel Count
- IP Channel Upgrades
- Solid State OS Drive (SSD)
- DVD-ROM Drive
- RAID5
- Intel® Core™ i7 Processor
- Dual NIC
- 2U Rack Mountable
- 3-Year Hardware Warranty
- 1-Year Advanced Replacement

Made in the USA

+1.818.937.0700 | www.arecontvision.com | avsales@arecontvision.com

Available from A1 Security Cameras
www.a1securitycameras.com email: sales@a1securitycameras.com

Recorder Specifications

Model		AV-CSHPXxxT (JBOD)	AV-CSHPXxxTR (RAID)
Recording	Max IP Channels	64	
	Recording Resolutions	Up to 4K Ultra HD	
	Max Recording Rate	250 Mbps	500 Mbps
	Image Compression	H.264	
Connections	Video Outputs	1 x DVI-D / 1 x DVI-I / 2 x HDMI (maximum one monitor support)	
	Maximum Display Resolution	4K	
	Network 1	Dedicated Intel® GBE for client network	
	Network 2	Dedicated Intel® GBE for camera network	
	Alarm Sensor Inputs	4 x Form A contacts (optional add-on)	
	Digital Relay Outputs	4 x Form A contacts (optional add-on)	
	USB Ports	**Front:** 2 x USB 2.0 **Rear:** 2 x USB 2.0 / 4 x USB 3.0	
Software	Operating System	Microsoft® Windows	
	Video Signal Loss Detection	Yes	
	Motion Detection	Arecont Vision camera side or ONVIF Profile S server side	
	Remote Operation	ConteraVMS thick client / thin (web) client / mobile apps	
	User Management	Web or local based user permissions and account management	
	Recording Mode	Continuous / Motion / Continuous + Motion / Live Only	
	Playback Search	Multi-channel playback (1, 4, 9) / Calendar / Timeline / Thumbnail / Event (VMS and web client) / Object (VMS)	
	Clip Backup	DVD-RW / Cloud / USB	
	Digital Signature Support	Yes	
	Web Connect	Yes	

General

Keyboard and Mouse	Included	
DVD Drive	Yes	
Operating Temperature	Max temperature: 104°F (40°C)	
OS Drive Configuration	Dedicated Solid State Drive	
Maximum Storage Configuration	**JBOD**	80TB
	RAID	80TB (70TB Usable)[1]
Processor	Intel® i7	
Rack Mount	Installation kit and rack slide kit included	
Warranty	3 Years, 1 year advanced replacement	

Electrical

Input Voltage	650W (100V–240V auto switching)	
Power Consumption	**JBOD**	160W max
	RAID	175W max

Compliance

IP Camera Support	Arecont Vision / ONVIF Profile S / RTSP
Certification	ETL (Intertek) certified
CoO	Made in the USA

Mechanical

Dimensions *(See Dimensions)*	**Unit**	17.2" W (438mm) x 3.5" H (88mm) x 26" L (660mm)
	Packaged	24" W (610mm) x 8" H (203mm) x 34" L (864mm)
Weight	**Unit**	43lbs (19.5kg)
	Packaged	58lbs (26.3kg)

[1] Usable space after allocating space for RAID5 redundant backup

+1.818.937.0700 | www.arecontvision.com | avsales@arecontvision.com
Available from A1 Security Cameras
www.a1securitycameras.com email: sales@a1securitycameras.com

Controls and Connections

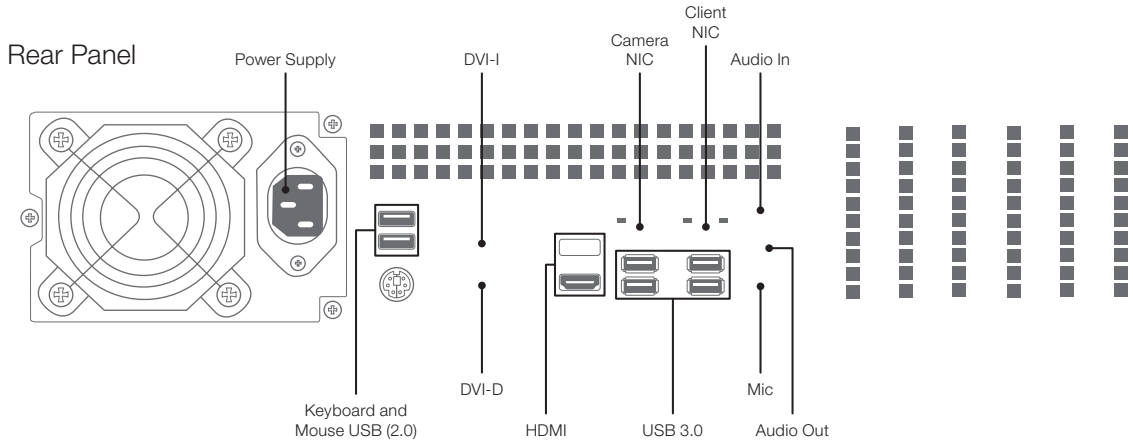

Dimensions

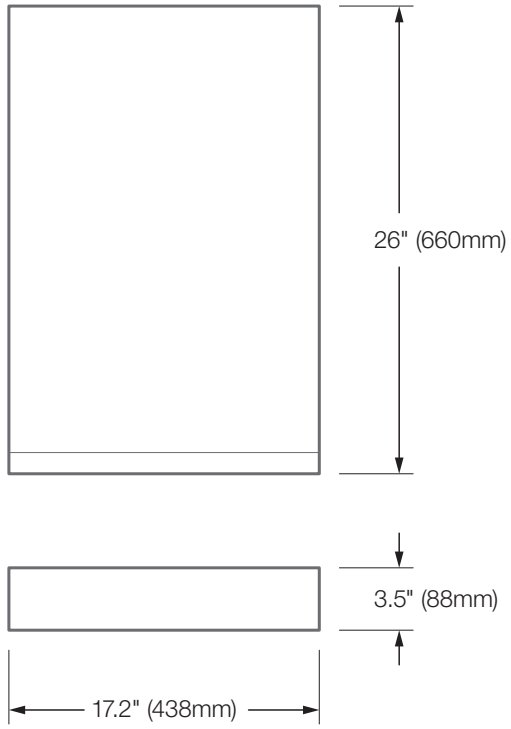

See Next Page for Ordering Information

Available from A1 Security Cameras
www.a1securitycameras.com email: sales@a1securitycameras.com

Contera™ High Performance NVR Server

SECURITY CAMERAS
The First Name in Security

Ordering Information

Configurations

JBOD or RAID5

Model Numbers

JBOD	AV-CSHPX16T	
	AV-CSHPX20T	
	AV-CSHPX24T	
	AV-CSHPX30T	
	AV-CSHPX36T	
	AV-CSHPX48T	
	AV-CSHPX64T	
	AV-CSHPX80T	
RAID5	AV-CSHPX12TR	12TB RAID5 (10TB Usable)[2]
	AV-CSHPX20TR	20TB RAID5 (16TB Usable)[2]
	AV-CSHPX24TR	24TB RAID5 (20TB Usable)[2]
	AV-CSHPX28TR	28TB RAID5 (24TB Usable)[2]
	AV-CSHPX36TR	36TB RAID5 (30TB Usable)[2]
	AV-CSHPX48TR	48TB RAID5 (42TB Usable)[2]
	AV-CSHPX64TR	64TB RAID5 (56TB Usable)[2]
	AV-CSHPX80TR	80TB RAID5 (70TB Usable)[2]

Software and Service Licenses

Part Number	Description
ConteraVMS™	
ConteraVMS™ Software Licenses	
AV-CST1	Contera Standard 1 Channel Recording License with 1 Year ConteraWS Free
AV-CPM1	Contera Premium 1 Channel Recording License with 1 Year ConteraWS Free
AV-CPR1	Contera Professional 1 Channel Recording License with 1 Year ConteraWS Free
ConteraVMS™ Software Expansion Licenses	
AV-CST1-EXP	Contera Standard 1 Channel Expansion Recording License with 1 Year ConteraWS Free
AV-CPM1-EXP	Contera Premium 1 Channel Expansion Recording License with 1 Year ConteraWS Free
AV-CPR1-EXP	Contera Professional 1 Channel Expansion Recording License with 1 Year ConteraWS Free
ConteraVMS™ Software Upgrade Licenses	
AV-CSUBAPM	Contera Standard to Premium 1 Channel Upgrade
AV-CSUPMPR	Contera Premium to Professional 1 Channel Upgrade
ConteraWS™	
ConteraWS™ (Web Services) Access License Including Software Updates	
AV-CWS1Y	Contera 1 Year ConteraWS 1 Channel Access License
AV-CWS4Y	Contera 4 Year ConteraWS 1 Channel Access License
AV-CWS4Y-PROMO	Contera 4 Year ConteraWS 1 Channel Access License 16 Channel Promotion (Must be 16 Channel minimum and deployed on Contera hardware)
ConteraWS™ (Web Services) Cloud Storage Expansion	
AV-CWS1Y50GB	ConteraWS 50GB Cloud Storage Expansion (1 Year)

Create Your Model (Example: **AV-CSHPX64TR**)

Contera Series	High Performance NVR Server	Default Storage	Storage Type	RAID5
AV	C	SHPX	12[3], 16[4], 20, 24, 28[3], 30[4], 36, 48, 64, 80	T (Terabytes)	R

[2] Usable space after allocating space for RAID5 redundant backup
[3] RAID5 models only
[4] RAID5 not available

Arecont Vision
A COSTAR COMPANY

425 E. Colorado St. 7th Floor | Glendale, CA USA 91205 | +1.818.937.0700 | www.arecontvision.com | avsales@arecontvision.com

Made in the USA

© 2018 Arecont Vision Costar, LLC. All rights reserved. Arecont Vision and the Arecont Vision logo are registered trademarks of the company.
Contera, ConteraCMR, ConteraVMS, and ConteraWS are business use trademarks of the company.

Rev 001.004